Technical Specifications RS140 Underway Rotor Stabilizer

Electrical requirements

Power supply	230 VAC / 50 Hz
Max. power consumption (per unit*)	1500 W
Average power consumption (per unit*)	1000 W
Peak consumption (+/- 0,5 sec)	12,5 Amp
Protection	C16 / 30 mA (one unit) C25 / 100 mA (two units)
Inverter recommendation	Victron Phoenix 1600 Va (one unit) | 3000 Va (two units)

Mechanical requirements *Structure reinforcement to withstand dynamic loads of at least 9000 Nm*

Steel & Aluminium hulls	Box shaped reinforcement
GRP & Wooden hulls	(Wooden) reinforcement laminated to hull & frame Through hull bushing installed with stainless steel 316 doubler plates an hollex filler (or equivalent)

Stabilizer placement

Stabilizer units	From amidships to approximately 1.5 m (5 ft) forward of the transom, positioned as far outboard as practical
Control box	Flexible installation location (dry and accessible), horizontal or vertical placement possible.
Display	Installed near the main helm or other preferred control position

Construction

Welding bushing	Steel S355J2H with stainless steel 316 insert / Stainless steel 316 / Aluminium 4.5 Mn (AlMg)
Elbow	Nodular cast iron (epoxy coated)
Shaft	Hardened stainless 17/4 PH
Rotor tube	Carbon with stainless steel 316 insert Length : 1000 or 1250 mm, Ø 140 mm
Bearings shaft	Maintenance free roller bearings
Bearings bushing	Sleeve bearing
Seals	Multiple seals / O-rings
Gears	Hardened steel
Gear housing & Inside structure	Machined aluminium
Swivel motor	400 W industrial grade 3 phase motor
Rotation motor	1900 W industrial grade servo drive
Drive belt	Multi V-belt
Safety	Break-away bolts to protect the swivel mechanism in case of severe impact Manual retraction mechanism

*One unit: one rotor stabilizer positioned on the port or starboard side

ROTORSWING
YACHT STABILITY CONTROL

Industriestraat 5 | 6361 HD Nuth | The Netherlands | +31 (0) 6 25442572
info@rotorswing.com | www.rotorswing.com

Technical Specifications RS140 Underway Rotor Stabilizer

At Cruise Speed



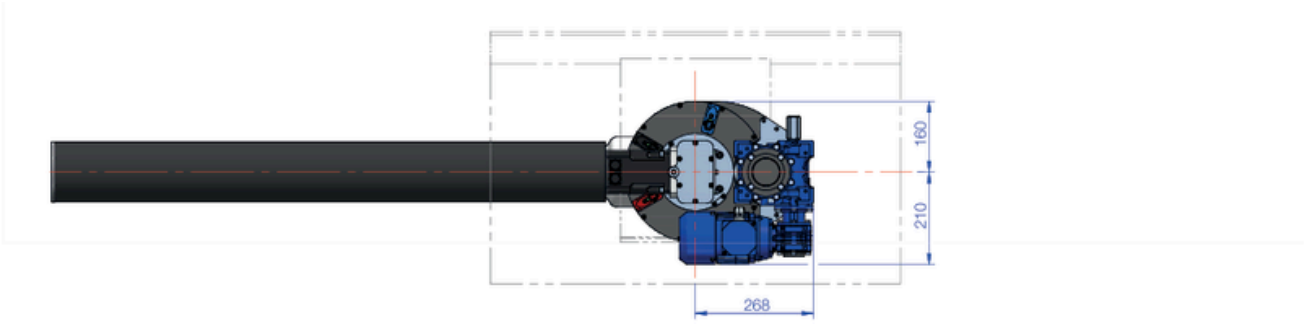

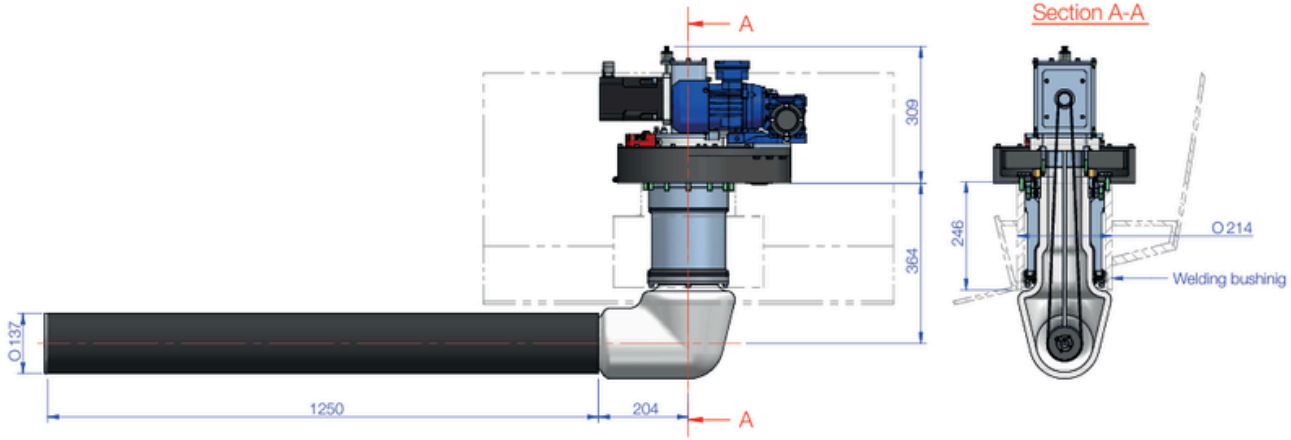

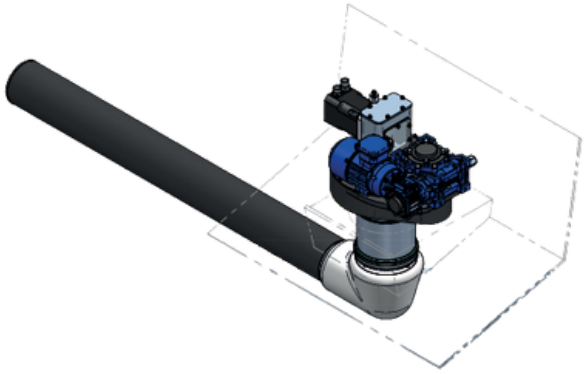

Industriestraat 5 | 6361 HD Nuth | The Netherlands | +31 (0) 6 25442572
info@rotorswing.com | www.rotorswing.com